Fairo 170 ECO-line 3 Sided

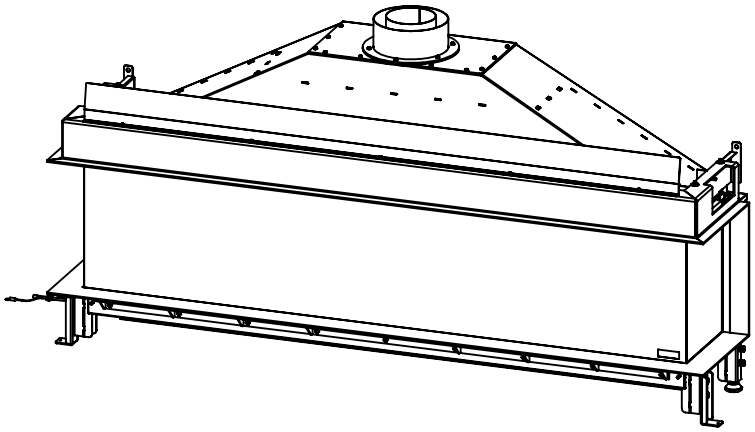

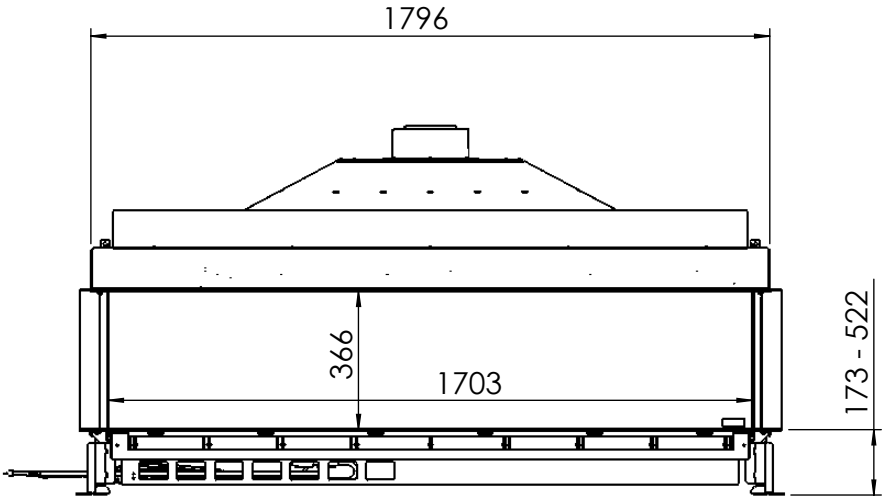

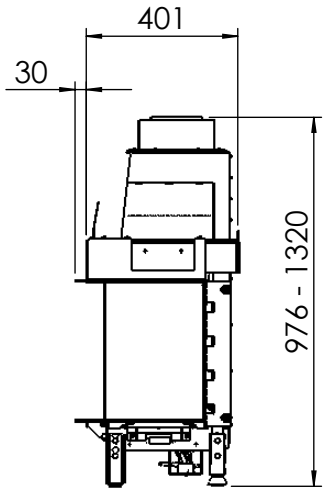

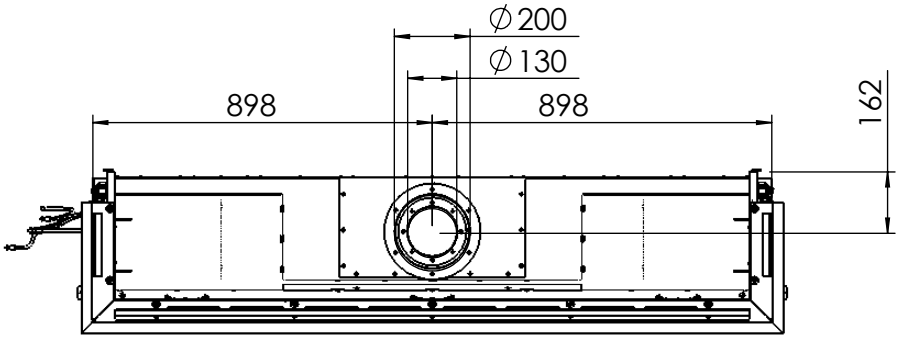

All dimensions in mm. Modifications under reserve. 16-10-2012 sheet 1 / 3

© All rights reserved. This drawing is sole property of Kal-fire. No part of this drawing may be reproduced, or published, in any form or in any way without prior written permission from Kal-fire.

Fairo 170 ECO-line 3 Sided

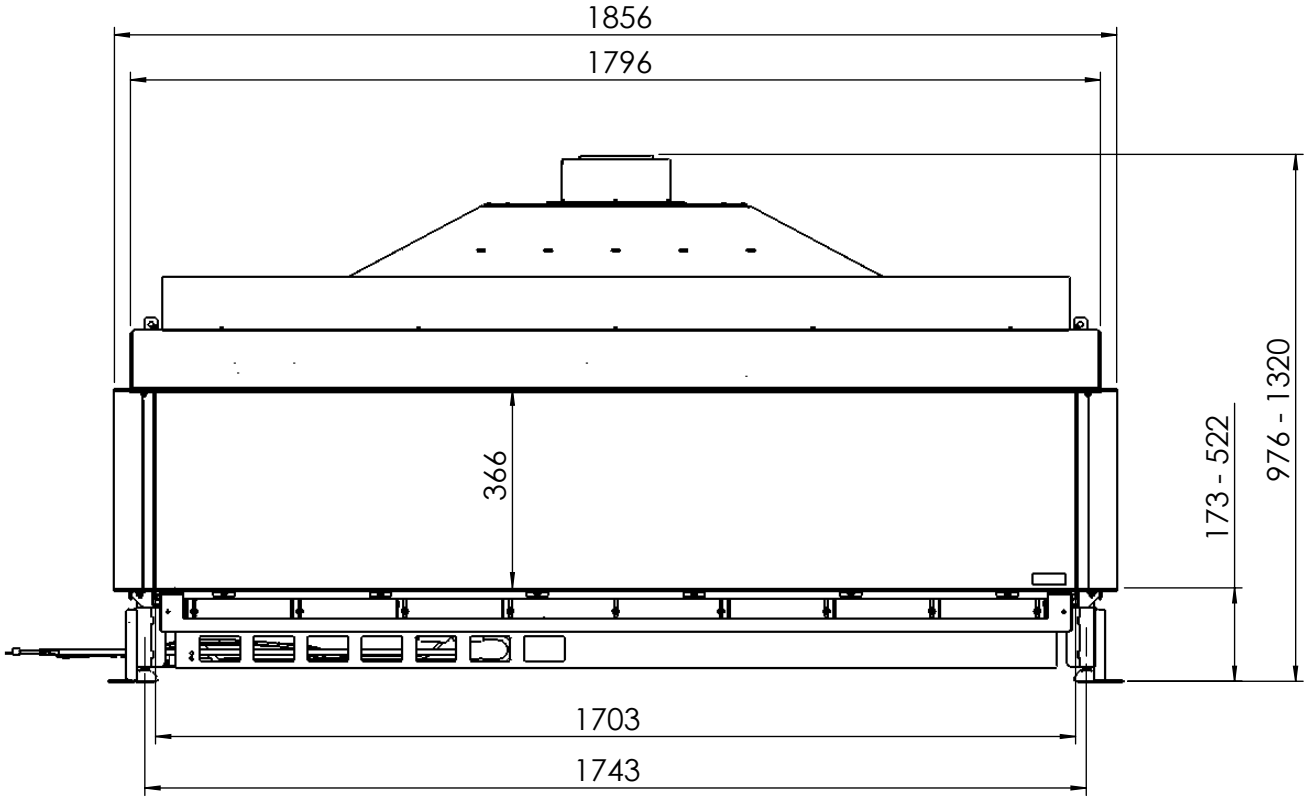

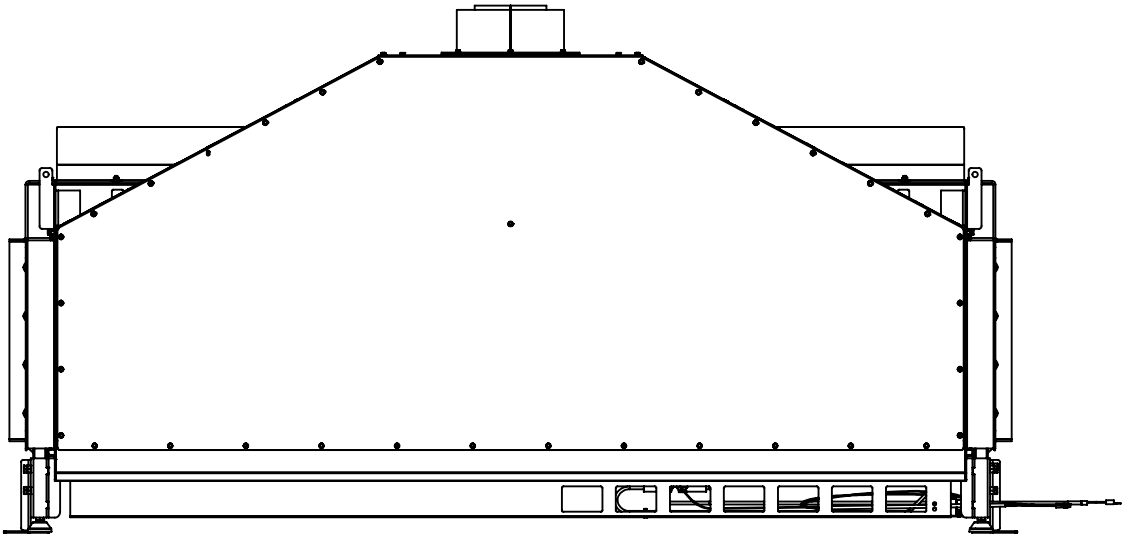

All dimensions in mm. Modifications under reserve. 16-10-2012 sheet 2 / 3

© All rights reserved. This drawing is sole property of Kal-fire. No part of this drawing may be reproduced, or published, in any form or in any way without prior written permission from Kal-fire.

Fairo 170 ECO-line 3-Sided

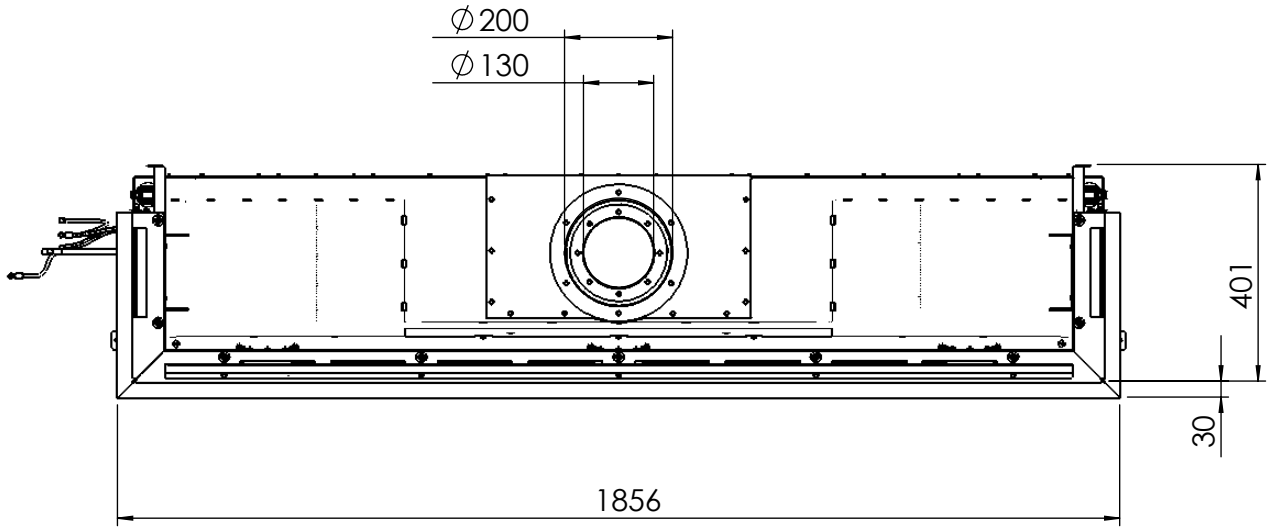

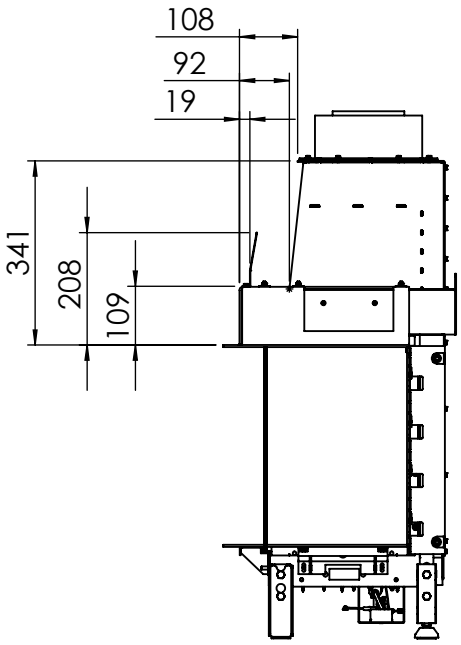

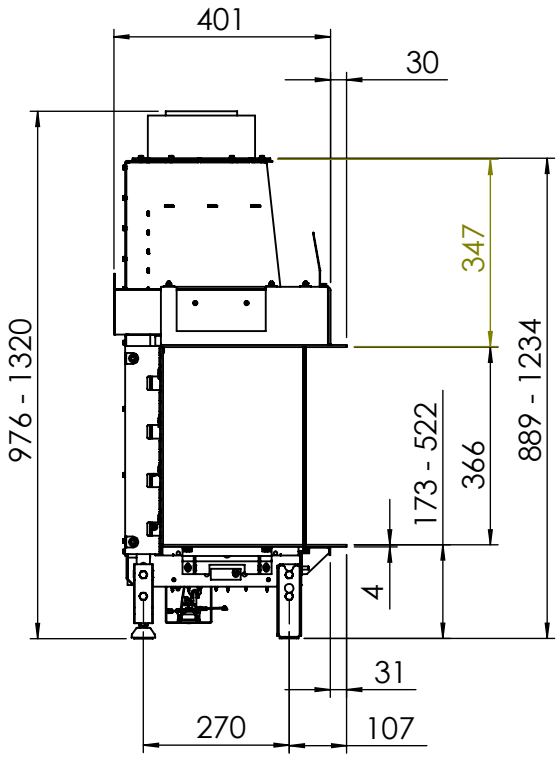

All dimensions in mm. Modifications under reserve.

16-10-2012 sheet 3 / 3

© All rights reserved. This drawing is sole property of Kal-fire. No part of this drawing may be reproduced, or published, in any form or in any way without prior written permission from Kal-fire.